UMBERTO PIANIGIANI S.r.l.
via della Torricella, 37/39 - 50012 Bagno a Ripoli (FI) ITALY
tel.: +39 055 620687 - e-mail: pianigia@pianigiani.it

PRODUCT DATA SHEET NO. 13

T5 SENSOR

with anti-stretch side reinforcement
Hardness 50 SH

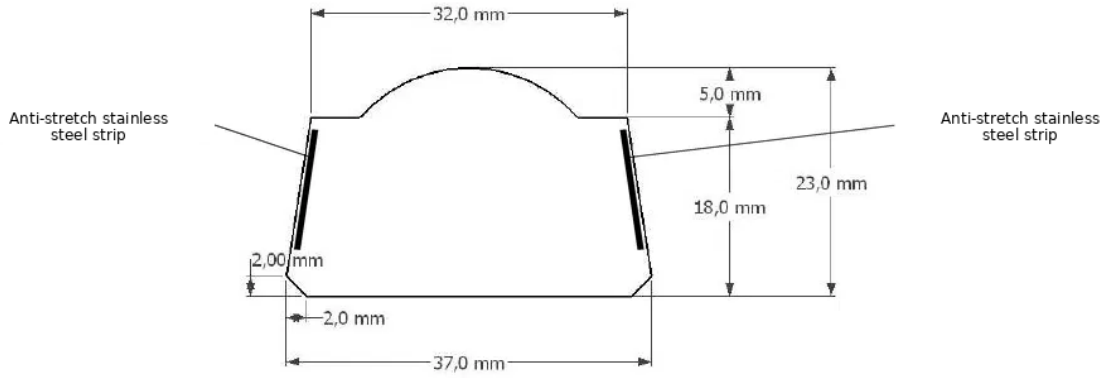

Guaranteed minimum performance characteristics	
Passing speed of vehicles:	0 ÷ 80 km/h
Activation pressure:	10 ÷ 25 kg/cm^2
Activation speed:	< 1 ms @ 12V
Downtime:	> 1 ms
Operating ambient temperature:	-30 ÷ 60° C
Electrical resistance of the sensor at rest:	> 500 MΩ
Product life period:	1 year or 2 million passes

Conditions to be met to guarantee the minimum product service life:

1. *During installation and operation, the sensors must not be punctured or damaged by sharp objects.*
2. *Cable pulling force must not exceed 20 kg.*
3. *The entire flat part of the sensor head must be protected by a steel plate.*
4. *During operation, the support beneath the sensor must always be kept clean to prevent damage to the sensor.*

Date of last update:

31/07/2026

Management signature:

UMBERTO PIANIGIANI srl
L'AMMINISTRATORE UNICO
(Dott. Cosimo Pianigiani)